Dual-band Dielectric Antenna for WLAN Applications

Z. Wang[(1)], S. Kamalraj [(1)], C. C. Chiau[(1)], X. Chen[(1)], B. S. Collins[(2)], and S. P. Kingsley[(2)]

[(1)]*Department of Electronic Engineering, Queen Mary, University of London, Mile End Road, London, E1 4NS, U.K.*
zhao.wang@elec.qmul.ac.uk

[(2)]*Antenova Ltd., Far Field House, Albert Road, Stow-cum-Quy, Cambridge, CB5 9AR, UK.*
brian.collins@ieee.org

ABSTRACT: Having gained insights into the operation of a single band dielectric resonator antenna working at 2.4GHz, a dual-band dielectric resonator antenna is proposed to operate at both 2.4GHz and 5.2GHz for IEEE802.11a/b/g applications, based on a novel feeding method. Characteristics of the prototype antennas are assessed using both Finite Integration Technique simulation and experimental measurement.

INTRODUCTION:

Dielectric Resonator Antennas (DRAs) have emerged as a novel antenna technology, with features of high efficiency, small size and resistance to proximity detuning [1]. Their radiation arises from a displacement current circulating through a dielectric medium, which is usually high-permittivity and low-loss ceramic.

However, one of the snags holding up wide applications of DRAs is the feeding technique. Though there exist a range of feeding methods for DRAs, such as slot-coupled microstrip lines, microstrip lines and probes, it is found that the performance of DRAs is very sensitive to the choice of feeding methods [1][2]. Therefore, feeding a DRA becomes a major issue for mass production. Recently, Antenova Ltd. UK has developed a new type of feed technique for DRAs, consisting of an over-shooting microstrip line with tuning stub. It helps to achieve the required repeatable performance for mass production [2]. According to our previous study of this antenna [3], the feeding structure has been designed to make the antenna operate as a traditional DRA with positioning tolerance of dielectric pellet. In this paper, an improved design is proposed to excite the second mode of the DRA and make it also operate at 5.2GHz.

The simulations are performed using the CST Microware Studio™ software package which utilises a Finite Integration Technique for electromagnetic computation [4]. The antenna was manufactured by Antenova and measured in the Antenna Measurement Laboratory of Queen Mary, University of London. The return losses were measured using an HP8720ES Network Analyser and the radiation patterns were measured in an anechoic chamber.

SINGLE BAND ANTENNA ANALYSIS:

The prototype DRA consists of four layers: the ground plane, the substrate (PCB board), the microstrip feeding line and the ceramic pellet as shown in Fig. 1.

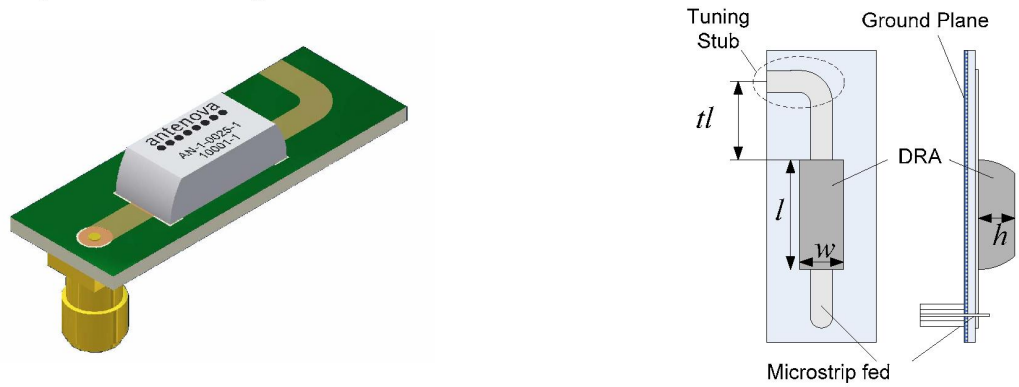

(a) 3-D model **(b) schematic diagrams**

Fig. 1 Pictures of the single band antenna. (a) 3-D model; and (b) schematic diagrams.

The size of the ground plane and the substrate is 40mm x 15mm. The permittivity of the substrate is 4.7 and it has a thickness of 1.6mm. The ceramic pellet is a top-flattened ceramic half-cylinder of permittivity around 90 with a metal

1-4244-1088-6/07/$25.00 ©2007 IEEE.

© 2007 IEEE. Personal use of this material is permitted. Permission from IEEE must be obtained for all other uses, in any current or future media, including reprinting/republishing this material for advertising or promotional purposes, creating new collective works, for resale or redistribution to servers or lists, or reuse of any copyrighted component of this work in other works.
DOI: 10.1109/IWAT.2007.370100

coating on the bottom. The ceramic pellet's length (l), width (w), and height (h) are 15mm, 6mm and 5mm, respectively. A 50Ω-microstrip line with a width of 3mm is connected to the coaxial cable through an SMA connector. In the simulation, all components were modelled using the practical dimensions, including the SMA connector.

Figure 2 shows the simulated and the measured return losses of the prototype antenna. The simulated result agrees reasonably well with the measured one. The measured return loss curve shows that the antenna has -6dB bandwidth of 220MHz with the centre frequency at 2.47GHz. This bandwidth is more than enough to cover IEEE802.11b/g applications.

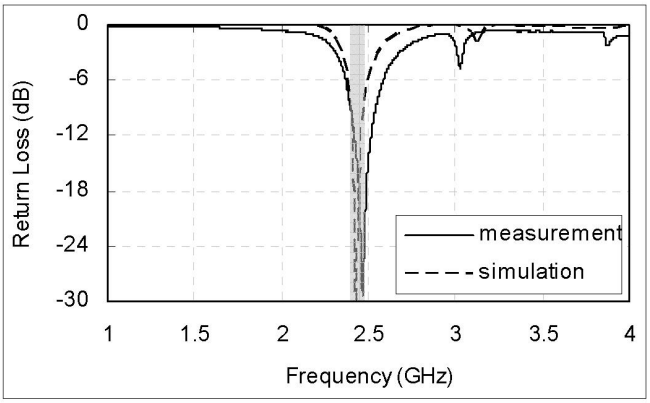

Fig. 2 The simulated and measured return loss with *l*=15mm, *w*=6mm, *h*=5mm and *tl*=9.2mm.

Studying of the permittivity (ε_r) of the ceramic pellet shows that the prototype antenna is operating like a traditional DRA (TE_{10} mode) where the resonant frequency is proportional to the square root of the permittivity. The tuning stub was introduced at the end of the microstrip line in the prototype DRA to improve the impedance matching, hence the positioning tolerance of the ceramic pellet, because the operating bandwidth is not very sensitive to the variation of the tuning stub length and dielectric pellet position [3].

DUAL BAND ANTENNA DESIGN:

In order to make the antenna operate at both 2.4GHz and 5.2GHz, part of the ground plane beneath the tuning stub is removed, while other parameters are kept as the previous single band design. The backward view of the prototype antenna and its schematic diagram are shown in figure 3 as below.

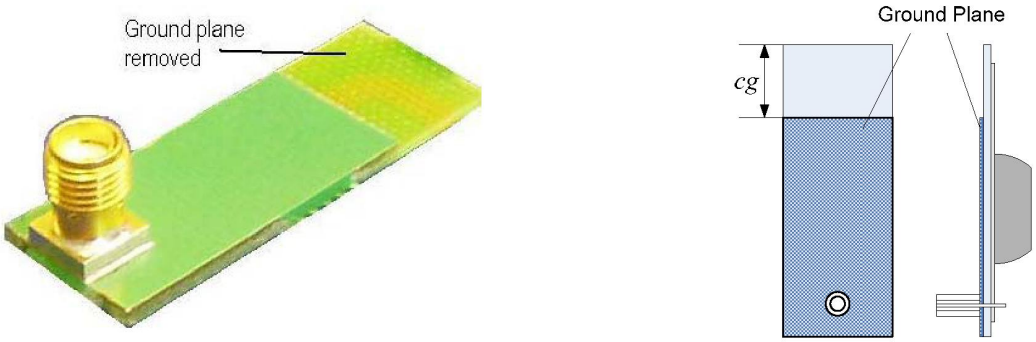

(a) 3-D model **(b) schematic diagrams**

Fig. 3 Pictures of the dual band antenna. (a) 3-D model; and (b) schematic diagrams.

The simulated and measured return losses of the antenna are compared in figure 4. Around 2.4GHz, the resonant frequency of the proposed antenna is slightly shifted downwards to 2.38GHz. The resonant frequency can be moved back to 2.44GHz by modify the length of dielectric pellet (l) to 13.5mm. At the higher frequency band, both of the curves cover 5.2GHz band, although they do not perfectly agree with each other. The disagreement is possibly due to the inaccurate fabrication of the ground plane edge, which is a sensitive parameter of the matching circuit. The dielectric pellet operates at the second mode (TE_{20} mode) providing the second resonance around 5.2GHz. The measured curve shows that the antenna has the -6dB bandwidth of 130MHz (5.6%) at 2.325GHz and 490MHz (9.5%) at 5.15GHz, respectively.

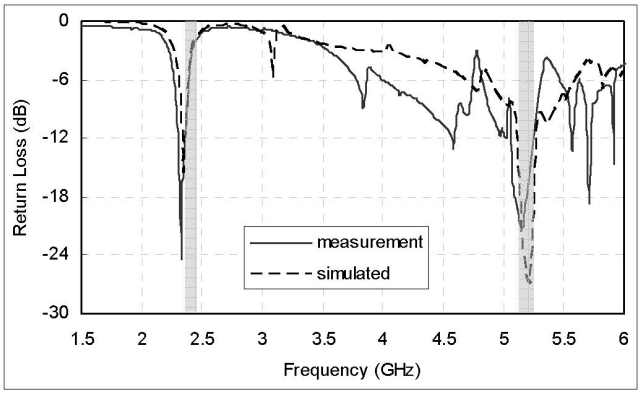

Fig. 4 The simulated and measured return loss with *l*=15mm, *w*=6mm, *h*=5mm, *tl*=9.2mm, and *cg*=10mm

The position of the dielectric pellet mounted on the substrate is a vital parameter for traditional dielectric resonator antennas, and influences the operating modes. However, the proposed antenna features fairly good position tolerance of the dielectric pellet, even though it is not mounted exactly as designed, as shown in figure 5.

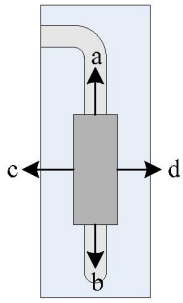

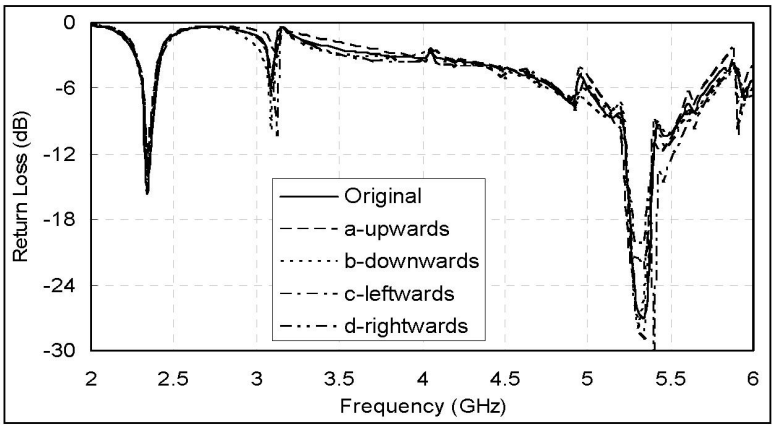

(a) Schematic diagram **(b) Return losses**

Fig. 5 Schematic diagram and simulated return losses for antennas with slightly shifted (1mm) dielectric pellet (a-upwards; b-downwards; c-leftwards; d-rightwards compared with the original designed antenna)

The radiation patterns of the antenna are measured inside an anechoic chamber with the transmitting field provided by a quad ridge horn with dual-polarisation capability. Figure 6 shows that E-plane and the H-plane of the antenna at 2.4GHz and 5.2GHz.

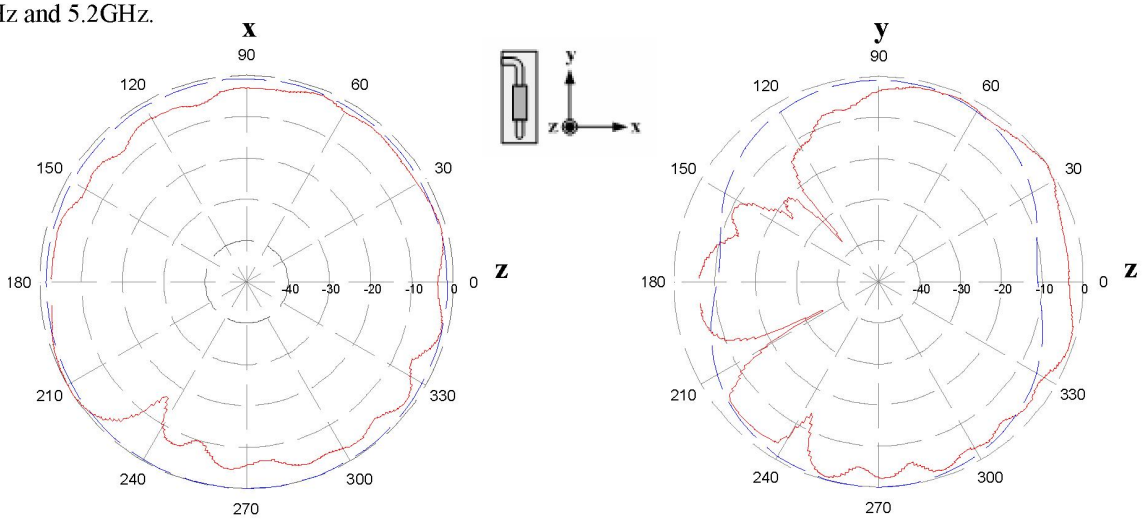

(a) H-plane (x-z plane) at 2.4GHz (b) E-plane (y-z plane) at 2.4GHz

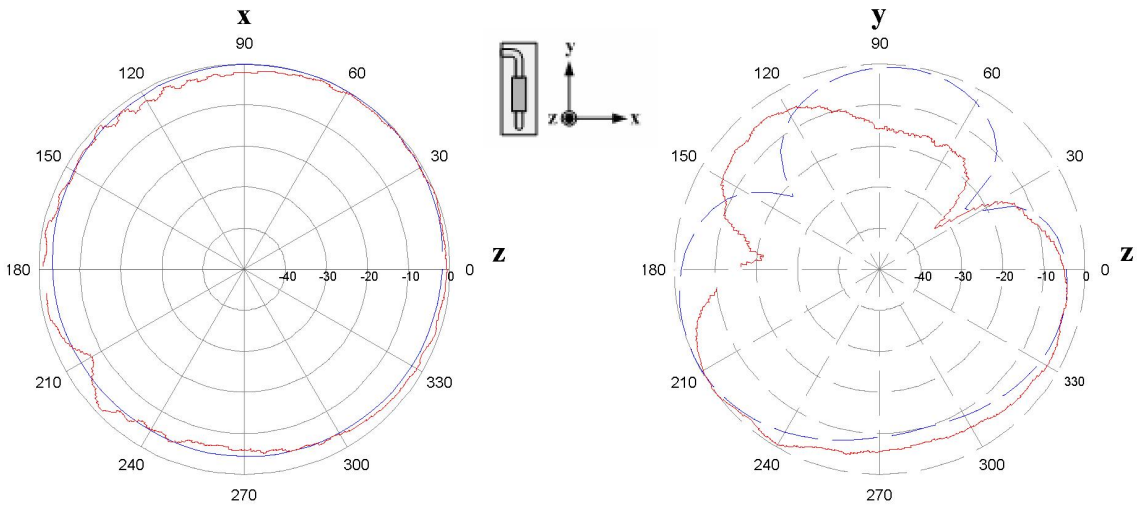

(c) H-plane (x-z plane) at 5.2GHz (d) E-plane (y-z plane) at 5.2GHz

Fig. 6 Simulated (---) and measured (–) radiation patterns of the prototype antenna

The H-plane (x-z plane) of the simulated and measured radiation patterns at both frequencies agree with each other quite well, being omni-directional, similar to traditional dipole or monopole. However, there are significant discrepancies between the simulated and measured results of the E-plane radiation patterns, especially at the back lobe (near 180°). This is mainly due to the presence of the long coaxial cable connected to the antenna during the measurement in the anechoic chamber.

CONCLUSION:

A novel microstrip feeding method for DRAs developed at Antenova Ltd, UK has been re-designed to excite dual modes of DRA. The designed antenna has been investigated both numerically and experimentally to reveal the principle of its operation. It has been shown that this simple feed method has successfully excited the second mode of the dielectric pellet, providing sufficient bandwidth for WLAN applications. It is found that the performance of the dual band DRA depends on critically the lengths of the ground plane and microstrip line, but is less sensitive to the positioning of the dielectric pellet. In the meanwhile, the dual band DRA is very small with the size of only 0.12λ. The combination of both features makes this type of DRA very attractive for portable terminals.

ACKNOWLEDGMENT:

The authors would like to thank John Dupuy of the Department of Electronic Engineering, Queen Mary, University of London, for their help in the fabrication and measurement of the antennas. The authors would like to acknowledge Computer Simulation Technology (CST), Germany, for the complimentary license of the Microwave Studio^{TM} package.

REFERENCES:

[1] R. K. Mongia and P. Bhartia, "Dielectric Resonator Antennas – A Review and General Design Relations for Resonant Frequency and Bandwidth", *International Journal of Microwave and Millimetre- Wave Computer-Aided Engineering*, 4, (3), pp 230-247,1994.

[2] S. P. Kingsley, S. G. O'Keefe, T. J. Palmer, J. W. Kingsley, "Dielectric resonator antenna with microstrip feed line", British Patent 2396747, June 2004.

[3] Z. Wang, C. C. Chiau, X. Chen, B. S. Collins, S. P. Kingsley, "A miniature broadband dielectric resonator antenna (DRA) operating at 2.4GHz", IWAT 2006, New York, U.S., May 2006.

[4] CST-Microwave Studio, User's Manual 5, 2004.